SMART Board MX (V3) Pro series with iQ

SBID-MX255-V3N-PW
SBID-MX265-V3N-PW
SBID-MX275-V3N-PW
SBID-MX286-V3N-PW

Also available in V3 models

Display

Screen sizes (diagonal)	55", 65", 75", 86"
Backlight	LED
Aspect ratio	16:9
Maximum display resolution	4K UHD (3840 × 2160)
Refresh rate	60 Hz
Lifespan	≥ 50,000 hours
Brightness (maximum)	55": ≥ 350 cd/m^2 65", 75", 86": ≥ 400 cd/m^2
Response time	≤ 8 ms
Viewing angle	178°
Glass[1]	Fully heat-tempered, anti-glare, bonded glass
Frame color	White
Convenience buttons	Power, home, volume, input select, screen shade, freeze frame
Sensors	Ambient light, infrared
Audio	2 integrated 15 W speakers

Interactive experience

Touch technology	HyPr Touch™ with Advanced IR
Touch features	Simultaneous Tool Differentiation™ Object Awareness™ Silktouch™
Frame rate	100 Hz
Accuracy	±1 mm (over 90% area)
Minimum object size	3 mm
Multitouch capabilities	20 – Windows® and Mac 10 – Chrome OS™
Tools included	Pens (×2)
Tool holders	Magnetic, frame-mounted

Software

iQ built-in Android™ experience	Included
SMART Meeting Pro® Room license	Included
SMART Meeting Pro Personal licenses (×10)	Included
SMART Ink® and SMART Product Drivers	Included
SMART Remote Management	Subscription for length of the included warranty

smarttech.com
smarttech.com/contact

© 2022 SMART Technologies ULC. All rights reserved. SMART Board, SMART Notebook, SMART Ink, HyPr Touch, Simultaneous Tool Differentiation, Object Awareness, Silktouch, smarttech, the SMART logo and all SMART taglines are trademarks or registered trademarks of SMART Technologies ULC in the U.S. and/or other countries. The Adopted Trademarks HDMI, HDMI High-Definition Multimedia Interface, and the HDMI Logo are trademarks or registered trademarks of HDMI Licensing Administrator, Inc. in the United States and other countries. All other third-party product and company names may be trademarks of their respective owners. This product and/or use thereof is covered by one or more of the following U.S. patents: www.smarttech.com/patents. Models and specifications may vary by region. Please contact your local representative for details. Contents are subject to change without notice. July 18, 2022.

[1] 55" displays don't include zero-bonded glass.

iQ built-in Android experience	
Operating system	Android version 9.0 (Automatic update to Android version 11 scheduled for the second half of 2022.)
Memory	6 GB DDR
Storage	32 GB
Digital whiteboard	✓
Web browser	✓
Screen sharing	✓
Other features	SMART Whiteboard Customizable home screen Live input preview File and app libraries Google Drive™ and OneDrive™ access
Object Awareness supported	✓
Ability to run third-party applications	✓
Cloud storage access	✓
Languages supported	Chinese (simplified), Chinese (traditional), Czech, Danish, Dutch, English, Estonian, Finnish, French, German, Greek, Hungarian, Italian, Japanese, Korean, Latvian, Lithuanian, Norwegian, Polish, Portuguese, Romanian, Russian, Slovak, Slovenian, Spanish, Swedish, Ukrainian, Vietnamese, Welsh
Updates	Automatic over-the-air (OTA)

PC computing	
OPS support	✓
OPS-C support	✓
PC module power supported OPS	60 W
Optional computing modules	SMART OPS PC with Windows 10 Pro SMART Chromebox

Inputs	Front	Back
OPS PC accessory slot (60 W devices)	–	1
HDMI® 2.0 with HDCP 1.4 and HDCP 2.2 support	1	2
VGA video	–	1
Stereo 3.5 mm	–	1
RS-232 room control (DB-9 connector)	–	1
RJ45 Ethernet (passthrough)	–	2
USB Type-C 4K @ 60Hz Display Port alternate mode, touch, and digital audio; 15 W power delivery	1	–
USB Type-C 4K @ 60Hz Display Port alternate mode, touch, and digital audio; 65 W power delivery	–	1
USB 2.0 Type-A	–	1
USB 3.0 Type-A	2	1
USB 3.0 Type-B	1	3

Outputs[2]	Front	Back
Stereo 3.5 mm (variable)	–	1
Audio S/PDIF (fixed)	–	1
RS-232 room control (DB-9 connector)	–	1

Included cables and accessories	Qty
Country-specific power cable	1
16' 5" (5 m) USB cable	1
Pens	2
External dual-band 2.4 and 5 GHz antennae	3
Remote control	1
AAA batteries	2
Wall mount bracket kit	1
Illustrated installation instructions	1
Important information document	1

[2] V3 models also include an HDMI 2.1 (HDCP 2.3) Out connector.

Connectivity

Wired	RJ45 (×2) 1000baseT
Wi-Fi	IEEE 802.11 a/b/g/n/ac with 2 × 2 MIMO (both 2.4 and 5 GHz bands) supporting WEP, WPA, WPA2 PSK, and 802.1X EAP authentication protocols
Bluetooth	5.0 dual mode

Storage and operating requirements

Power requirements	100V to 240V AC, 50 Hz to 60 Hz
Operating temperature	41–95°F (5–35°C)
Storage temperature	-4–140°F (-20–60°C)
Humidity	5–80% relative humidity, non-condensing

Power consumption

Typical	55": 90 W 65": 120 W 75": 150 W 86": 150 W
Standby	0.4 W

Certification and compliance[3]

US / Canada	UL, FCC, ISED, TSCA, CONEG Packaging, Proposition 65
EU / EEA / EFTA / UK	CE, UKCA, LVD, CB, EMCD, RED, REACH, RoHS, Battery, WEEE, Packaging, POP, Ecodesign
Australia / New Zealand	RCM
Performance standards	ENERGY STAR®, HDMI

Purchasing information

Order number: **SBID-MX255-V3-PW** **SBID-MX255-V3N-PW**	SMART Board MX055-V3 interactive display with iQ
Order number: **SBID-MX265-V3-PW** **SBID-MX265-V3N-PW**	SMART Board MX065-V3 interactive display with iQ
Order number: **SBID-MX275-V3-PW** **SBID-MX275-V3N-PW**	SMART Board MX075-V3 interactive display with iQ
Order number: **SBID-MX286-V3-PW** **SBID-MX286-V3N-PW**	SMART Board MX086-V3 interactive display with iQ
Optional accessories	See smarttech.com/accessories

Warranty

SMART Assure warranty	Includes advanced hardware replacement and access to onsite support. Terms and conditions vary by region. Contact your local reseller or distributor for information and visit smarttech.com/warranty.

Cable requirements

HDMI	Certified premium high speed HDMI (18 Gbps) Maximum length: 23' (7 m)
USB 2.0	USB 2.0 certified Hi-Speed (480 Mbps) support Maximum length: 16' (5 m)
USB 3.0	USB 3.0 certified SuperSpeed (5 Gbps) support Maximum length: 9' (3 m)
USB Type-C	USB 3.2 Gen 1 certified SuperSpeed (5 Gbps) support Maximum length: 6' (2 m)
More information	See smarttech.com/kb/171555

[3]Product availability may vary by region.

This product has received additional certifications not listed here.

Installation, dimensions, and weights

Notes

- All dimensions ± 1/8" (0.3 cm). All weights ± 2 lb. (0.9 kg).
- Product ships upright.
- Leave space around the display to ensure adequate ventilation. See *SMART Board MX series interactive displays installation and maintenance guide* (smarttech.com/kb/171257) for the specific space requirements.

SBID-MX255-V3N-PW / SBID-MX255-V3-PW

Dimensions

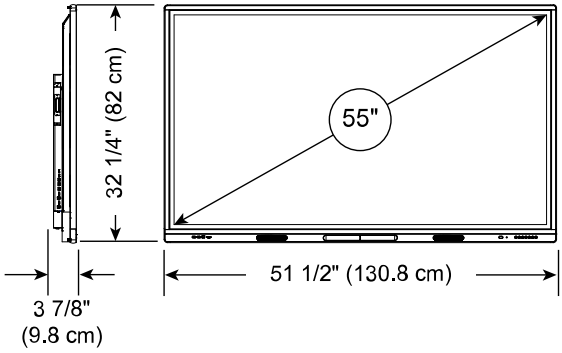

Weight

77 lb. (35 kg)

VESA mount

M8, 400 × 400 mm

Handles

0

Shipping dimensions and weight (including pallet)

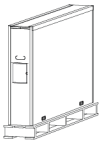

56.9" × 40.7" × 8.1" (144.5 cm × 103.4 cm × 20.5 cm)
115 lb. (52 kg)

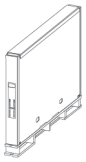

56.1" × 43.7" × 6.7" (142.5 cm × 111 cm × 17 cm)
116 lb.(53 kg)

SBID-MX265-V3N-PW / SBID-MX265-V3-PW

Dimensions

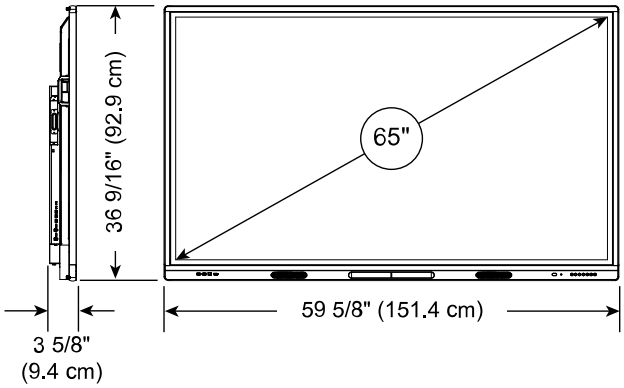

Weight

88 lb. (40 kg)

VESA mount

M8, 600 × 400 mm

Handles

2

Shipping dimensions and weight (including pallet)

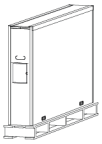

65.2" × 45.6" × 8.1" (165.5 cm × 116 cm × 20.5 cm)
132 lb. (60 kg)

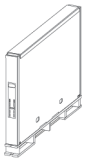

63.8" × 45.9" × 6.3" (162 cm × 116.6 cm × 16 cm)
134 lb. (61 kg)

Installation, dimensions, and weights (continued)

Notes

- All dimensions ± 1/8" (0.3 cm). All weights ± 2 lb. (0.9 kg).
- Product ships upright.

SBID-MX275-V3N-PW / SBID-MX275-V3-PW

Dimensions

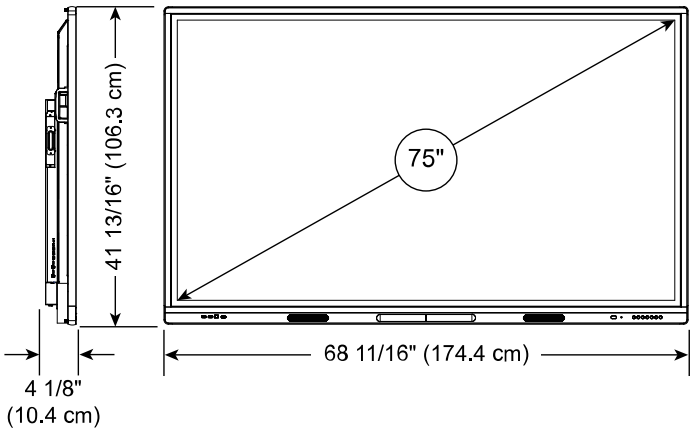

Weight

116 lb. (52 kg)

VESA mount

M8, 600 × 400 mm

Handles

2

Shipping dimensions and weight (including pallet)

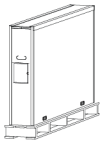

74.2" × 50.2" × 8.1" (188.5 cm × 127.4 cm × 20.5 cm)
166 lb. (75 kg)

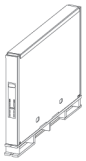

74.2" × 50.6" × 6.7" (188.5 cm × 128.5 cm × 17 cm)
169 lb. (77 kg)

SBID-MX286-V3-PW

Dimensions

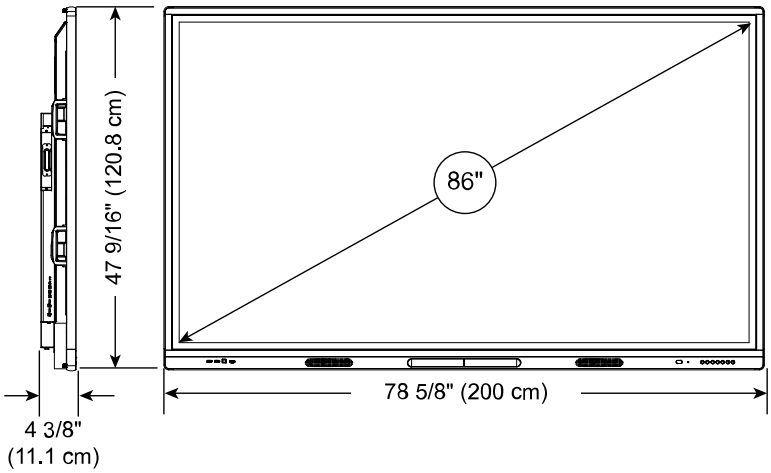

Weight

158 lb. (72 kg)

VESA mount

M8, 700 × 400 mm

Handles

4

Shipping dimensions and weight (including pallet)

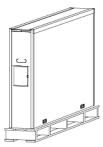

86" × 47.6" × 8"(218.5 cm × 142.4 cm × 20.5 cm)
219 lb. (99 kg)

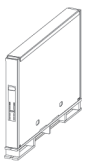

85.2" × 56.9" × 7.1" (216.5 cm × 144.5 cm × 18 cm)
222 lb. (10177 kg)